Firewall

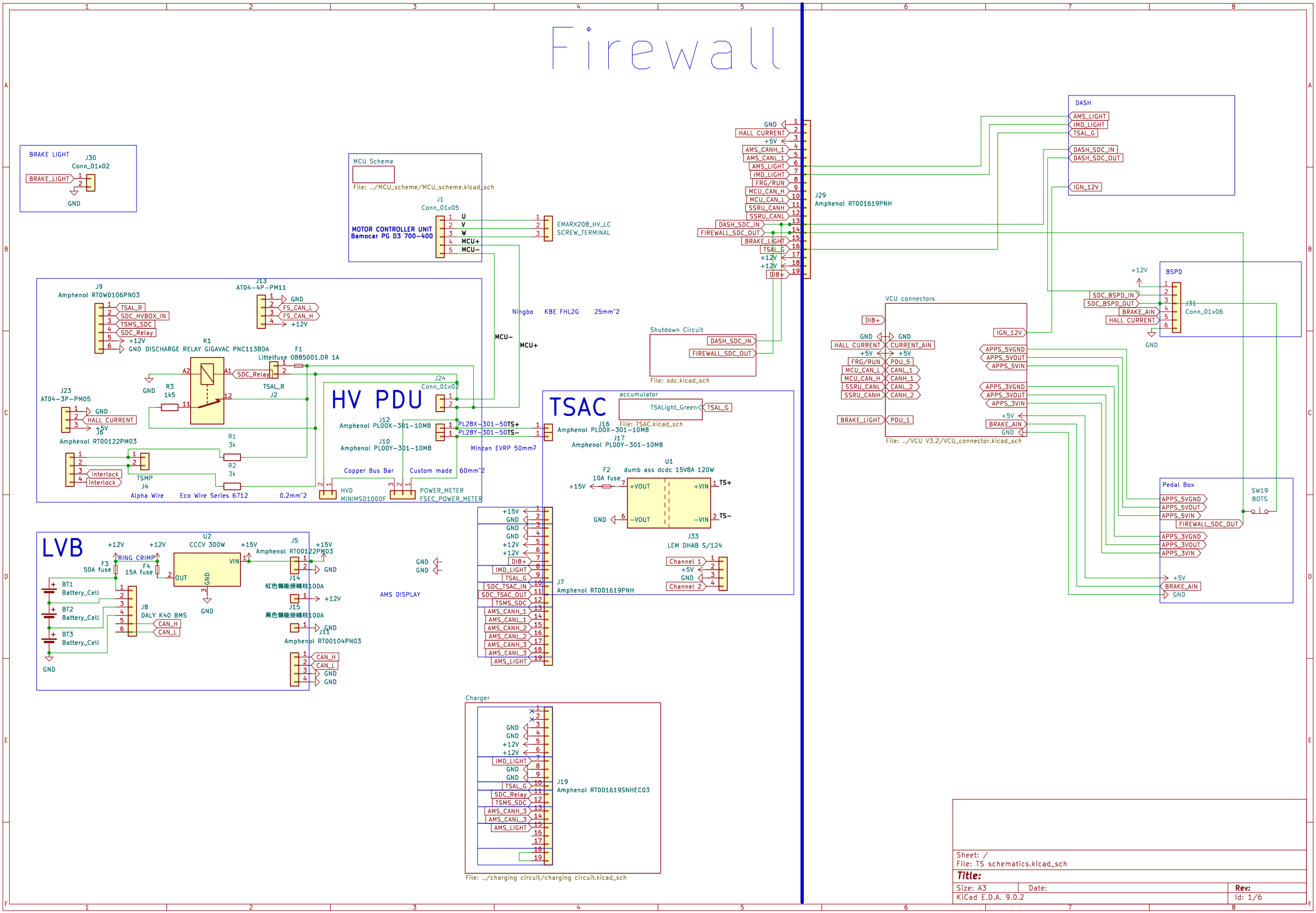

Sheet: /
File: TS schematics.kicad_sch

Title:

Size: A3	Date:	Rev:
KiCad E.D.A. 9.0.2		Id: 1/6

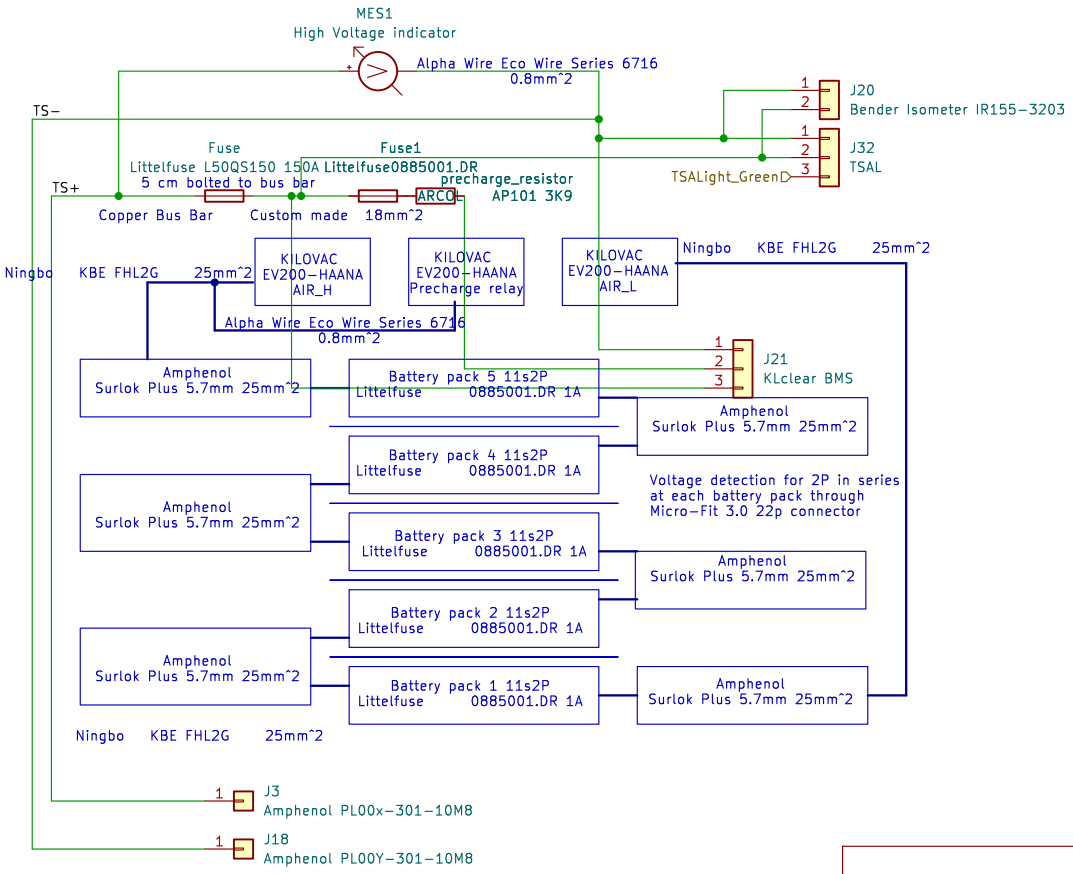

Sheet: /accumulator/
File: TSAC.kicad_sch

Title:

Size: A4	Date:	**Rev:**
KiCad E.D.A. 9.0.2		Id: 2/6

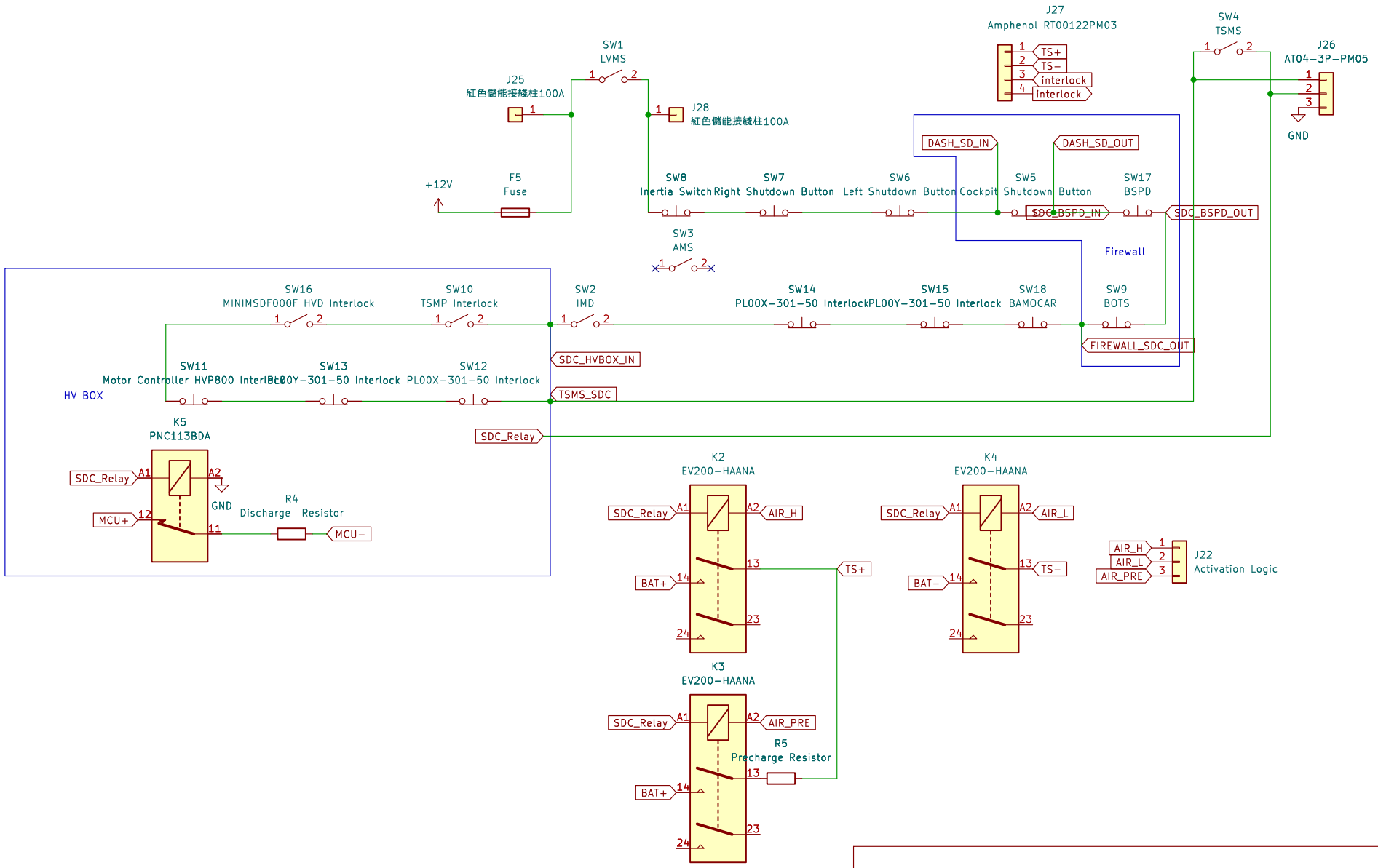

Sheet: /Shutdown Circuit/
File: sdc.kicad_sch

Title:

Size: A4	Date:	Rev:
KiCad E.D.A. 9.0.2		Id: 3/6

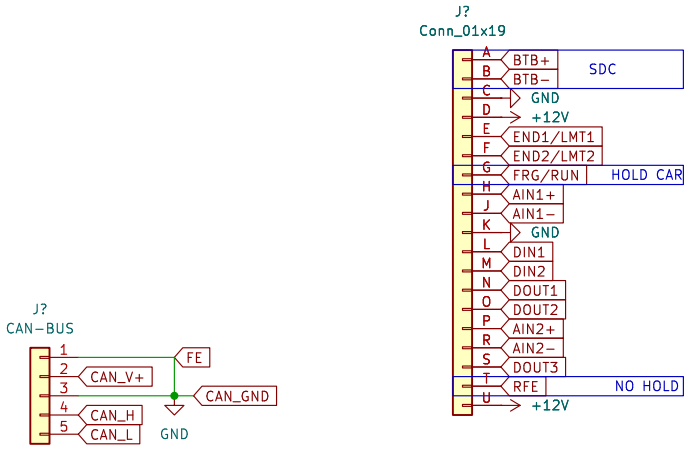

Sheet: /MCU Scheme/
File: MCU_scheme.kicad_sch

Title:

Size: A4	Date:	**Rev:**
KiCad E.D.A. 9.0.2		Id: 4/6

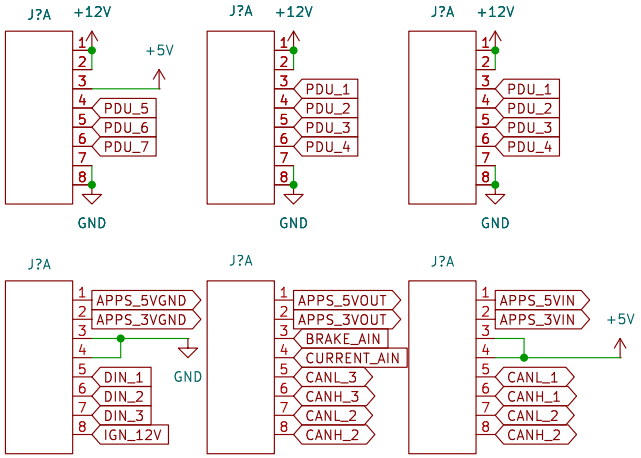

Sheet: /VCU connectors/
File: VCU_connector.kicad_sch

Title:

Size: A4	Date:	Rev:
KiCad E.D.A. 9.0.2		Id: 5/6

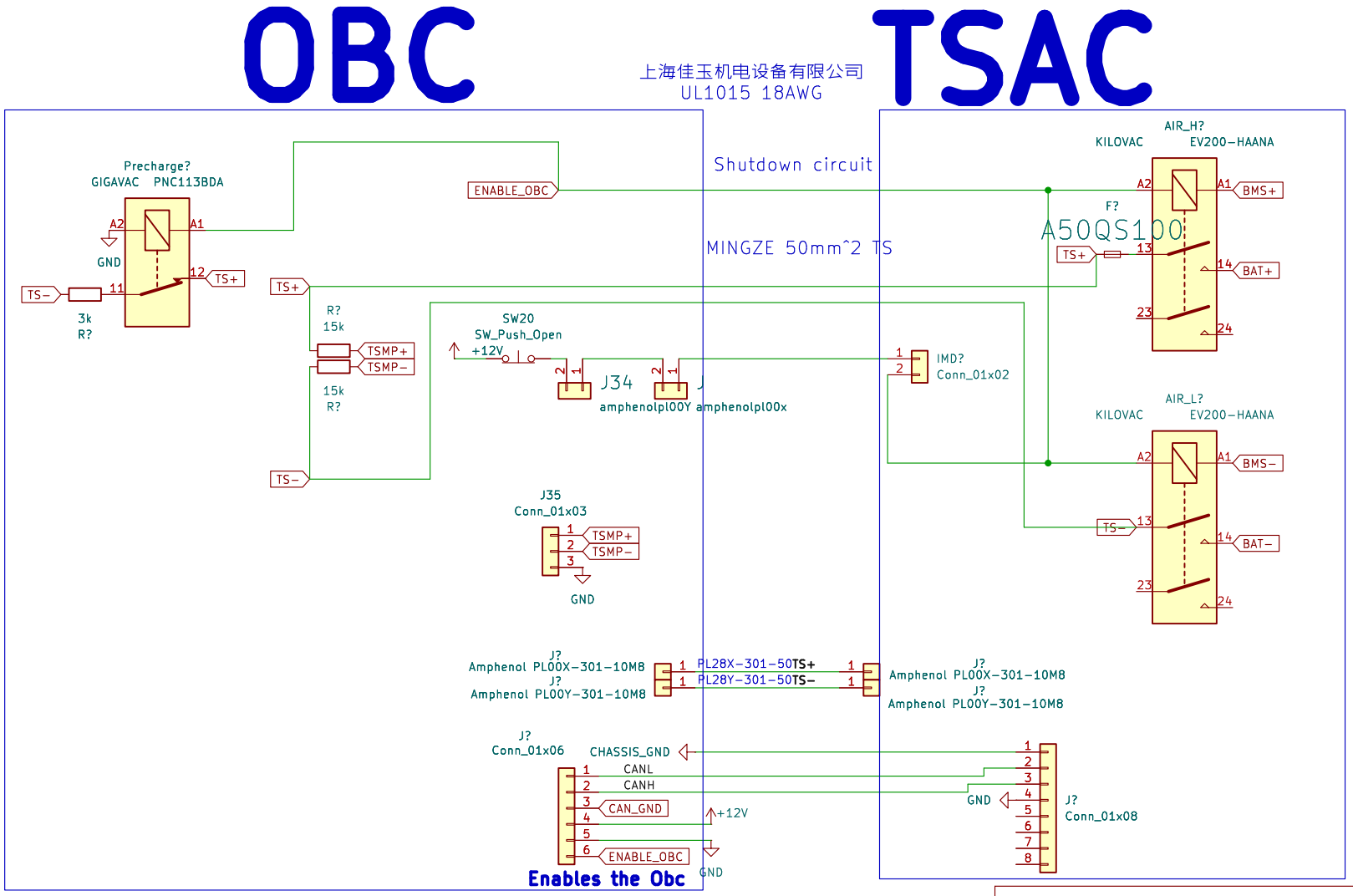

Sheet: /Charger/
File: charging circuit.kicad_sch

Title:

Size: A4	Date:	Rev:
KiCad E.D.A. 9.0.2		Id: 6/6